DS-2CD23123G2-LI2UY

12MP Acusense Smart Hybrid Light Fixed Turret Network Camera

AcuSense 3.0



- UHD: Ultra High Definition delivers lifelike immersion
- Smart Hybrid Light: Integrates IR and white lights, 3 supplemental lighting modes
- Person and vehicle classification based on deep learning
- Crystal-clear audio with Built-in Arrayed Dual-Mic (-2U models)
- Clear imaging against strong back light due to 120 dB true WDR technology
- Efficient H.265+ compression technology
- Water and dust resistant (IP67)
- Anti-corrosion design, providing reliability and longevity compared to standard (NEMA 4X)

▪ Specification

Camera	
Image Sensor	1/1.8" Progressive Scan CMOS
Max. Resolution	4608 × 2592
Min. Illumination	Color: 0.005 Lux @ (F1.6, AGC ON),0 Lux with light
Shutter Time	1 s to 1/100,000 s
Day & Night	IR cut filter
Angle Adjustment	Pan: 0° to 360°,tilt: 0° to 75°,rotate: 0° to 360°
Lens	
Lens Type	Fixed focal lens, 2.8 and 4 mm optional
Focal Length & FOV	2.8 mm, horizontal FOV 94.2°, vertical FOV 51.1°, diagonal FOV 110.2° 4 mm, horizontal FOV 73.1°, vertical FOV 40.2°, diagonal FOV 84.8°
Lens Mount	M16
Iris Type	Fixed
Aperture	F1.6
Depth of Field	2.8 mm: 2.9 m to ∞ 4 mm: 3.5 m to ∞
DORI	
DORI	2.8 mm, D: 117 m, O: 46 m, R: 23 m, I: 11 m 4 mm, D: 148 m, O: 59 m, R: 29 m, I: 14 m
Illuminator	
Supplement Light Type	IR,White Light
Supplement Light Range	Up to 30 m
Smart Supplement Light	Yes
IR Wavelength	850 nm
Video	
Main Stream	50 Hz: 20 fps (4608 × 2592) 25 fps (3840 × 2160, 2688 × 1520, 1920 × 1080, 1280 × 720) 60 Hz: 20 fps (4608 × 2592) 30 fps (3840 × 2160, 2688 × 1520, 1920 × 1080, 1280 × 720)
Sub-Stream	50 Hz: 25 fps (1280 × 720, 640 × 480, 640 × 360) 60 Hz: 30 fps (1280 × 720, 640 × 480, 640 × 360)
Third Stream	50 Hz: 10 fps (1920 × 1080, 1280 × 720, 640 × 480, 640 × 360) 60 Hz: 10 fps (1920 × 1080, 1280 × 720, 640 × 480, 640 × 360) *Third stream is supported under certain settings.
Video Compression	Main stream: H.265/H.264/H.264+/H.265+, Sub-stream: H.265/H.264/MJPEG, Third stream: H.265/H.264, *Third stream is supported under certain settings.
Video Bit Rate	32 Kbps to 20 Mbps
H.264 Type	Baseline Profile,Main Profile,High Profile
H.265 Type	Main Profile
Scalable Video Coding (SVC)	H.264 and H.265 encoding
Bit Rate Control	CBR,VBR

Region of Interest (ROI)	1 fixed region for main stream
Target Cropping	Yes
Audio	
Audio Type	-2U: Mono sound
Audio Compression	-2U: G.711/G.722.1/G.726/MP2L2/PCM/MP3/AAC-LC
Audio Bit Rate	-2U: 64 Kbps (G.711ulaw/G.711alaw)/16 Kbps (G.722.1)/16 Kbps (G.726)/16 Kbps to 64 Kbps (AAC-LC)/32 to 192 Kbps (MP2L2)/8 to 320 Kbps (MP3)
Audio Sampling Rate	-2U: 8 kHz/16 kHz/32 kHz/48 kHz
Environment Noise Filtering	-2U: Yes
Network	
Protocols	TCP/IP, ICMP, HTTP, HTTPS, FTP, DHCP, DNS, DDNS, RTP, RTSP, RTCP, NTP, UPnP, SMTP, IGMP, 802.1X, QoS, IPv4, IPv6, UDP, Bonjour, SSL/TLS, PPPoE, SNMP, WebSocket, WebSockets, SRTP, SFTP
Simultaneous Live View	Up to 6 channels
API	ONVIF (Profile S, Profile G, Profile T),ISAPI,SDK,ISUP
User/Host	Up to 32 users 3 user levels: administrator, operator, and user
Security	Password protection, complicated password, HTTPS encryption, 802.1X authentication (EAP-TLS, EAP-LEAP, EAP-MD5), watermark, IP address filter, basic and digest authentication for HTTP/HTTPS, WSSE and digest authentication for Open Network Video Interface, RTP/RTSP over HTTPS, control timeout settings, security audit log, TLS 1.1/1.2/1.3, host authentication (MAC address)
Network Storage	NAS (NFS, SMB/CIFS),Auto Network Replenishment (ANR)
Client	iVMS-4200,Hik-Connect,Hik-Central
Web Browser	Plug-in free live view: Chrome 80+, Firefox 80+, Edge 89+, Local service: Chrome 80+, Firefox 80+, Edge 89+
Image	
Image Parameters Switch	Yes
Image Settings	Saturation,brightness,contrast,sharpness,gain,white balance,adjustable by client software or web browser
Day/Night Switch	Day,Night,Auto,Schedule
Wide Dynamic Range (WDR)	120 dB
SNR	≥ 52 dB
Image Enhancement	BLC,HLC,3D DNR,Distortion Correction,Defog
Privacy Mask	4 programmable polygon privacy masks
Interface	
Ethernet Interface	1 RJ45 10 M/100 M self-adaptive Ethernet port
Audio	-2U: Built-in Microphone: Arrayed dual-microphone
On-Board Storage	Built-in memory card slot, support microSD/microSDHC/microSDXC card, up to 512 GB
Reset Key	Yes
Event	
Basic Event	Motion detection (support alarm triggering by specified target types (human and vehicle)),video tampering alarm,exception
Smart Event	Scene change detection
Linkage	Upload to FTP/NAS/memory card,notify surveillance center,trigger recording,trigger capture,send email

Deep Learning Function	
Face Capture	Yes
Perimeter Protection	Line crossing, intrusion, region entrance, region exiting Support alarm triggering by specified target types (human and vehicle)
General	
Power	12 VDC ± 25%, 0.7 A, max. 8.5 W,Ø5.5 mm coaxial power plug,reverse polarity protection, PoE: IEEE 802.3af, Class 3, max. 10.5 W
Material	Metal
Dimension	Ø127.3 mm × 96.3 mm (Ø5.0" × 3.8")
Package Dimension	170 mm × 170 mm × 160 mm (6.7" × 6.7" × 6.3")
Weight	Approx. 515 g (1.1 lb.)
With Package Weight	Approx. 755 g (1.7 lb.)
Storage Conditions	-30 °C to 60 °C (-22 °F to 140 °F). Humidity 95% or less (non-condensing)
Startup and Operating Conditions	-30 °C to 60 °C (-22 °F to 140 °F). Humidity 95% or less (non-condensing)
Language	33 languages: English, Russian, Estonian, Bulgarian, Hungarian, Greek, German, Italian, Czech, Slovak, French, Polish, Dutch, Portuguese, Spanish, Romanian, Danish, Swedish, Norwegian, Finnish, Croatian, Slovenian, Serbian, Turkish, Korean, Traditional Chinese, Thai, Vietnamese, Japanese, Latvian, Lithuanian, Portuguese (Brazil), Ukrainian
General Function	Heartbeat,mirror,flash log,password reset via email,pixel counter,anti-banding
Approval	
EMC	CE-EMC: EN 55032:2015+A1:2020, EN 50130-4:2011+A1:2014, EN IEC 61000-3-2:2019+A1:2021, EN 61000-3-3:2013+A1:2019+A2:2021
Safety	CB: IEC 62368-1:2014+A11, CE-LVD: EN 62368-1:2014/A11:2017
Environment	CE-RoHS: 2011/65/EU, WEEE: 2012/19/EU, Reach: Regulation (EC) No 1907/2006
Protection	IP67:IEC 60529-2013
Anti-Corrosion Protection	NEMA 4X (NEMA 250-2018)

▪ Typical Application

Hikvision products are classified into three levels according to their anti-corrosion performance. Refer to the following description to choose for your using environment.

This model has NO SPECIFIC PROTECTION.

Level	Description
Top-level protection	Hikvision products at this level are equipped for use in areas where professional anti-corrosion protection is a must. Typical application scenarios include coastlines, docks, chemical plants, and more.
Moderate protection	Hikvision products at this level are equipped for use in areas with moderate anti-corrosion demands. Typical application scenarios include coastal areas about 2 kilometers (1.24 miles) away from coastlines, as well as areas affected by acid rain.

No specific protection	Hikvision products at this level are equipped for use in areas where no specific anti-corrosion protection is needed.

▪ Dimension

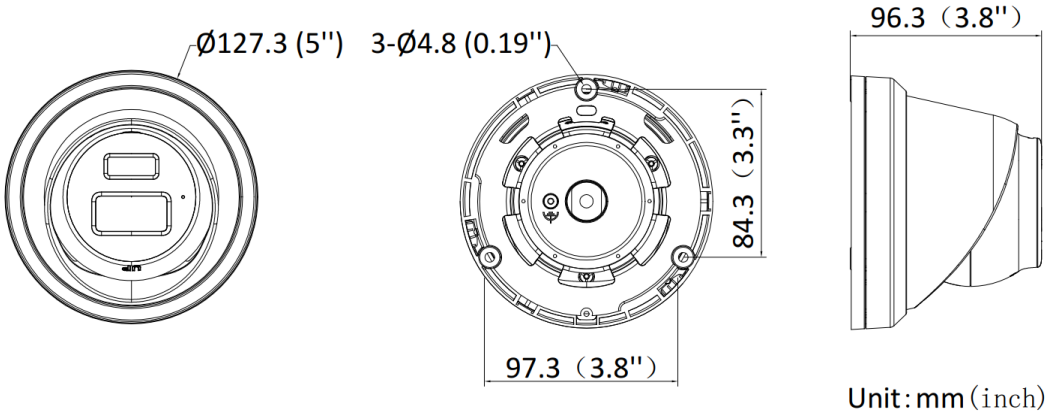

▪ Accessory

▪ Optional

DS-1273ZJ-140B-Y	DS-220AZJ-145-WAY	DS-1275ZJ-SUS	DS-1276ZJ-SUS	DS-1273ZJ-140-Y
				
DS-1280ZJ-PT6-Y	**DS-1275ZJ-S-SUS**	**DS-1271ZJ-140-Y**	**DS-1476ZJ-SUS**	**DS-1475ZJ-SUS**
				

▪ Installation Methods

Wall Mounting DS-1273ZJ-140B-Y+DS-1253ZJ-L	Wall Mounting DS-220AZJ-145-WAY	Wall Mounting DS-1273ZJ-140-Y+DS-1253ZJ-L	Vertical Pole Mounting DS-1275ZJ-SUS+DS-1280ZJ-PT6-Y+DS-1273ZJ-140-Y	Vertical Pole Mounting DS-1276ZJ-SUS+DS-1273ZJ-140-Y

		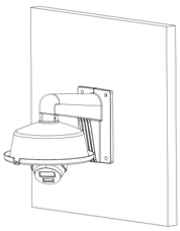	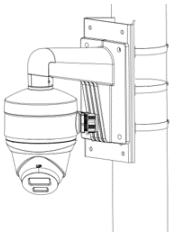	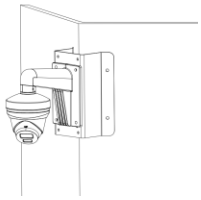
Vertical Pole Mounting DS-1275ZJ-S-SUS+DS-220AZJ-145-WAY	**Vertical Pole Mounting DS-1475ZJ-SUS+DS-220AZJ-145-WAY**	**Junction Box DS-1280ZJ-PT6-Y**	**Pendant Mounting DS-1271ZJ-140-Y**	**Corner Mounting DS-1476ZJ-SUS+DS-220AZJ-145-WAY**
				

See Far, Go Further

www.hikvision.com
support@hikvision.com

© Hangzhou Hikvision Digital Technology Co., Ltd. Unless otherwise agreed, Hikvision makes no warranties, express or implied. We reserve the right to introduce modifications without notice.

HIKVISION®