DS-2DE4415W-DE3
4MP 15× Network Speed Dome

Hikvision DS-2DE4415W-DE3 4MP 15× Network Speed Dome adopts 1/2.5" progressive scan CMOS chip. With the 15× optical zoom lens, the camera offers more details over expansive areas.

This series of cameras can be widely used for different indoor environment.

Key Features

- 1/2.5" progressive scan CMOS
- Up to 2560 × 1440@30fps resolution
- Min. illumination:
  Color: 0.005 Lux @(F1.6, AGC ON)
  B/W: 0.001 Lux @(F1.6, AGC ON)
- 15× optical zoom, 16× digital zoom
- Digital WDR, HLC, BLC, 3D DNR, Defog, EIS, Regional Exposure, Regional Focus
- 12 VDC & PoE+ (802.3 at, class4)
- Support H.265+/H.265 video compression

Specification

Camera Module	
Image Sensor	1/2.5" progressive scan CMOS
Min. Illumination	Color: 0.005 Lux @(F1.6, AGC ON) B/W: 0.001Lux @(F1.6, AGC ON)
White Balance	Auto/Manual/ATW (Auto-tracking White Balance)/Indoor/Outdoor/Fluorescent Lamp/Sodium Lamp
Gain	Auto/Manual
Shutter Time	50Hz: 1/1 s to 1/30,000 s 60Hz: 1/1 s to 1/30,000 s
Day & Night	IR Cut Filter
Digital Zoom	16×
Privacy Mask	24 programmable privacy masks
Focus Mode	Auto/Semi-automatic/Manual
WDR	Digital WDR
Lens	
Focal Length	5 mm to 75 mm, 15× optical zoom
Zoom Speed	Approx. 2.3 s (optical lens, wide-tele)
Field of View	Horizontal field of view: 53.8° to 4° (Wide-Tele) Vertical field of view: 31.9° to 2.3° (Wide-Tele) Diagonal field of view: 60.4° to 4.6° (Wide-Tele)
Working Distance	10 mm to 1500 mm (wide-tele)
Aperture Range	F1.6 to F2.8
PTZ	
Movement Range (Pan)	360° endless
Pan Speed	Configurable, from 0.1°/s to 160°/s Preset speed: 160°/s
Movement Range (Tilt)	From 0° to 90° (auto-flip)
Tilt Speed	Configurable, from 0.1°/s to 120°/s Preset Speed: 120°/s
Proportional Zoom	Support
Presets	300
Patrol Scan	8 patrols, up to 32 presets for each patrol
Pattern Scan	4 pattern scans, record time over 10 minutes for each scan
Power-off Memory	Support
Park Action	Preset/Pattern Scan/Patrol Scan/Auto Scan/Tilt Scan/Random Scan/Frame Scan/Panorama Scan
3D Positioning	Support
PTZ Position Display	Support
Preset Freezing	Support
Scheduled Task	Preset/Pattern Scan/Patrol Scan/Auto Scan/Tilt Scan/Random Scan/Frame Scan/Panorama Scan/Dome Reboot/Dome Adjust/Aux Output
Compression Standard	
Video Compression	Main Stream: H.265+/H.265/H.264+/H.264 Sub-stream: H.265/H.264/MJPEG Third Stream: H.265/H.264/MJPEG
H.264 Type	Baseline Profile/Main Profile/High Profile
H.264+	Support
H.265 Type	Baseline Profile/Main Profile/High Profile
H.265+	Support
Video Bitrate	32 Kbps to 16384 Kbps

SVC	Support
Smart Features	
Basic Event	Motion Detection, Video Tampering Detection, Exception
Smart Event	Intrusion Detection, Line Crossing Detection, Region Entrance Detection, Region Exiting Detection, Object Removal Detection, Unattended Baggage Detection
Smart Record	ANR (Automatic Network Replenishment), Dual-VCA
ROI	Main stream, sub-stream, and third stream respectively support four fixed areas.
Image	
Max. Resolution	2560 × 1440
Main Stream	50Hz: 25fps (2560 × 1440, 2048 × 1536, 1920 × 1080, 1280 × 960, 1280 × 720) 50fps (1920 × 1080, 1280 × 960, 1280 × 720) 60Hz: 30fps (2560 × 1440, 2048 × 1536, 1920 × 1080, 1280 × 960, 1280 × 720) 60fps (1920 × 1080, 1280 × 960, 1280 × 720)
Sub-Stream	50Hz: 25fps (704 × 576, 640 × 480, 352 × 288) 60Hz: 30fps (704 × 480, 640 × 480, 352 × 240)
Third Stream	50Hz: 25fps (1920 × 1080, 1280 × 960, 1280 × 720, 704 × 576, 640 × 480, 352 × 288) 60Hz: 30fps (1920 × 1080, 1280 × 960, 1280 × 720, 704 × 480, 640 × 480, 352 × 240)
Image Enhancement	HLC/BLC/3D DNR/Defog/EIS/Regional Exposure/Regional Focus
Network	
Network Storage	Built-in memory card slot, support Micro SD/SDHC/SDXC, up to 256 GB; NAS (NPS, SMB/CIPS), ANR
Protocols	IPv4/IPv6, HTTP, HTTPS, 802.1x, Qos, FTP, SMTP, UPnP, SNMP, DNS, DDNS, NTP, RTSP, RTCP, RTP, TCP/IP, UDP, IGMP, ICMP, DHCP, PPPoE, Bonjour
API	Open-ended, support ONVIF, ISAPI, and CGI, support HIKVISION SDK and Third-Party Management Platform
Simultaneous Live View	Up to 20 channels
User/Host	Up to 32 users 3 levels: Administrator, Operator and User
Security Measures	User authentication (ID and PW), Host authentication (MAC address); HTTPS encryption; IEEE 802.1x port-based network access control; IP address filtering
Client	iVMS-4200, iVMS-4500, iVMS-5200, Hik-Connect
Web Browser	IE 8 to 11, Chrome 31.0 to 44, Firefox 30.0 to 51
Interface	
Network Interface	1 RJ45 10 M/100 M Ethernet, PoE+ (802.3 at, class4)
General	
Power	12 VDC and PoE+ (802.3 at, class4) Max.: 18 W
Working Temperature	-10°C to 50°C (-14°F to 122°F)
Working Humidity	≤ 90%
Protection Level	TVS 4000V Lightning Protection, Surge Protection and Voltage Transient Protection
Material	ADC 12, PC+ABS, PC/PMMA
Dimensions	Ceiling mounting model: Φ 165 mm × 179.5 mm (Φ 6.50" × 7.07") In-ceiling mounting model: Φ 165 mm × 168 mm (Φ 6.50" × 6.61")
Weight	Approx. 2 kg (4.41 lb)

Available Model

DS-2DE4415W-DE3, 12 VDC & PoE+ (802.3 at, class4)

Dimensions

Ceiling Mounting

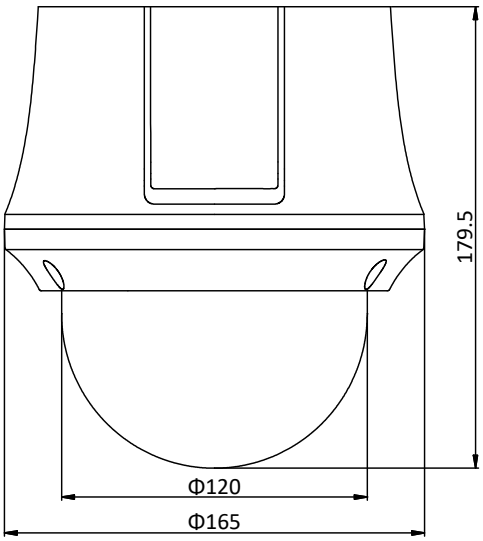

In-Ceiling Mounting

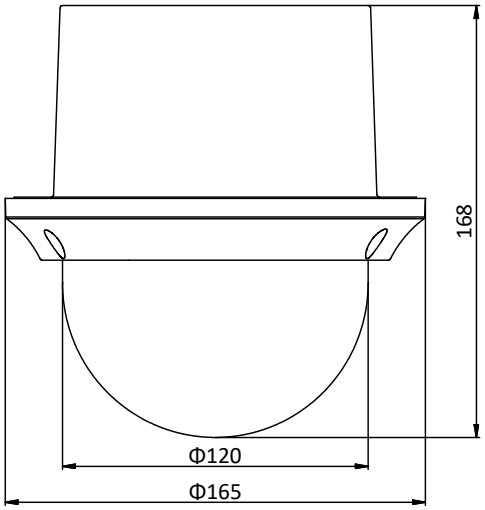

Unit: mm

Distributed by

Headquarters
No.555 Qianmo Road, Binjiang District,
Hangzhou 310051, China
T +86-571-8807-5998
overseasbusiness@hikvision.com

Hikvision USA
T +1-909-895-0400
sales.usa@hikvision.com

Hikvision Europe
T +31-23-55-42-770
info.eu@hikvision.com

Hikvision Middle East
T +971-4-8816086
salesme@hikvision.com

Hikvision Russia
T +7-495-669-67-99
saleru@hikvision.com

Hikvision India
T +91-22-28469900
sales@pramahikvision.com

Hikvision Italy
T +39-0438-6902
info.it@hikvision.com

Hikvision France
T +33(0)1-85-330-450
info.fr@hikvision.com

Hikvision Spain
T +34-91-737-16-55
info.es@hikvision.com

Hikvision Poland
T +48-22-460-01-50
poland@hikvision.com

Hikvision UK
T +01628-902140
support.uk@hikvision.com

Hikvision Singapore
T +65-6684-4718
sg@hikvision.com

Hikvision Oceania
T +61-2-8599-4233
salesau@hikvision.com

Hikvision Canada
T +1-909-895-0400
sales.usa@hikvision.com

Hikvision Korea
T +82-31-731-8841
sales.korea@hikvision.com

Hikvision Brazil
T +55 11 3318-0050
Latam.support@hikvision.com

Hikvision South Africa
Tel: +27 (10) 0351172
sale.africa@hikvision.com

Hikvision Hong Kong
T +852-2151-1761

© Hikvision Digital Technology Co., Ltd. 2016 | Data subject to change without notice.| 0505111080620