# DS-KH6310-WL
# Video Intercom Indoor Station with 7-inch Touch Screen

## Key Features

### Basic Functions

- Hands-free audiovisual communication with the door station and the master station in the intercom system
- Panic call supported
- 2-ch zone alarm supported
- Supports monitoring door stations and external cameras
- Remote unlocking via the client software or the app
- High-performance embedded SOC processor

### Video/Audio Functions

- HD video surveillance with high performance CMOS
- 7-inch colorful FTF LCD with resolution 800 x 480
- Capacitive touch screen and physical buttons
- Noise suppression and echo cancellation
- H.264 video compression

### Alarm Functions

- 2-ch alarm input sensors supported
- Auto-uploads alarm messages to the master station the client software, or the app once the alarm sensor is triggered

### Additional Features

- Community notice supported
- Convenient installation and easy operation

## Typical Application

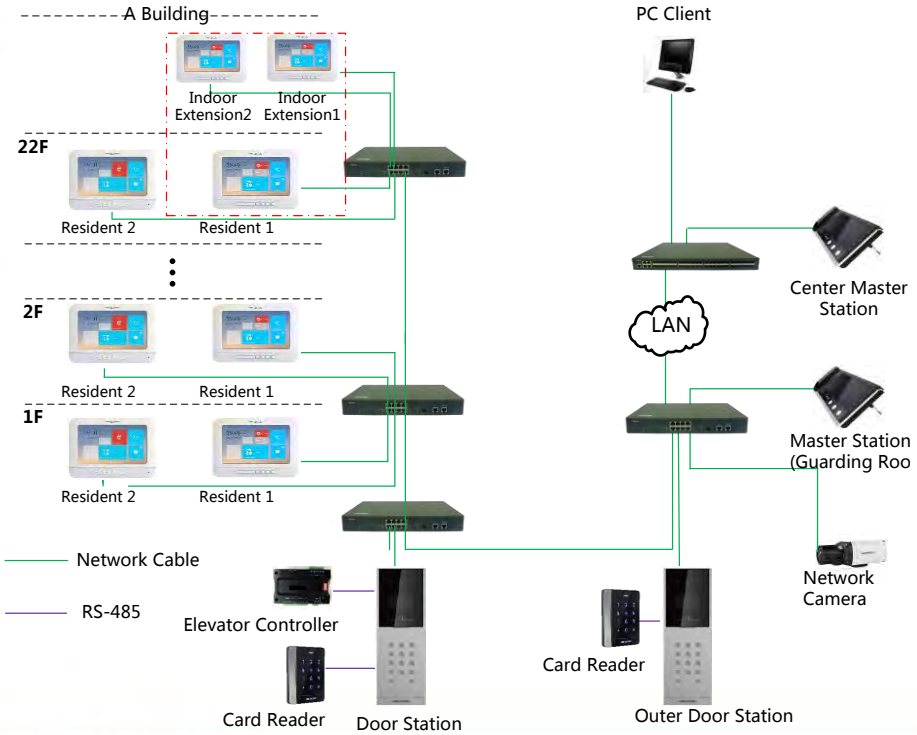

# Specifications

| Model | | DS-KH6310-WL |
|---|---|---|
| System parameters | Processor | High-Performance Embedded SOC Processor |
| | Operation system | Embedded Linux Operation System |
| Display parameters | Display screen | 7-Inch Colorful TFT LCD |
| | Display resolution | 800 × 480 |
| | Operation method | Capacitive Touch Screen, Physical Button |
| | Operation interface | Flattened UI Operation Interface |
| Audio parameters | Audio input | Built-in Omnidirectional Microphone |
| | Audio output | Built-in Loudspeaker |
| | Audio compression standard | G.711 U |
| | Audio compression rate | 64 Kbps |
| | Audio quality | Noise Suppression and Echo Cancellation |
| Network parameters | Ethernet | 10/100 Mbps Self-Adaptive Ethernet |
| | Network protocol | TCP/IP, RTSP |
| Alarm parameters | Alarm input | 2-ch Alarm Input Sensor |
| Device interfaces | Network interface | 1 RJ-45 10/100 Mbps Self-Adaptive Ethernet Interface |
| | RS-485 | 1 RS-485 Half-Duplex Port |
| | I/O output | 1 |
| General | Memory | 256 M |
| | Power supply | 24 VDC, Power Over Network Cable (DS-KAD606, DS-KAD612) |
| | | 12 VDC |
| | Power consumption | ≤10 W |
| | Working temperature | -10° C to + 55° C (14° F to 131° F) |
| | Working humidity | 10% to 90% |
| | Dimensions (L × W × H) | 217 mm × 142 mm × 26 mm (8.5" × 5.6" × 1.0") |
| | Certification | FCC, IC, CE, C-TICK, ROHS, REACH, WEEE |

## Appearance and Interfaces

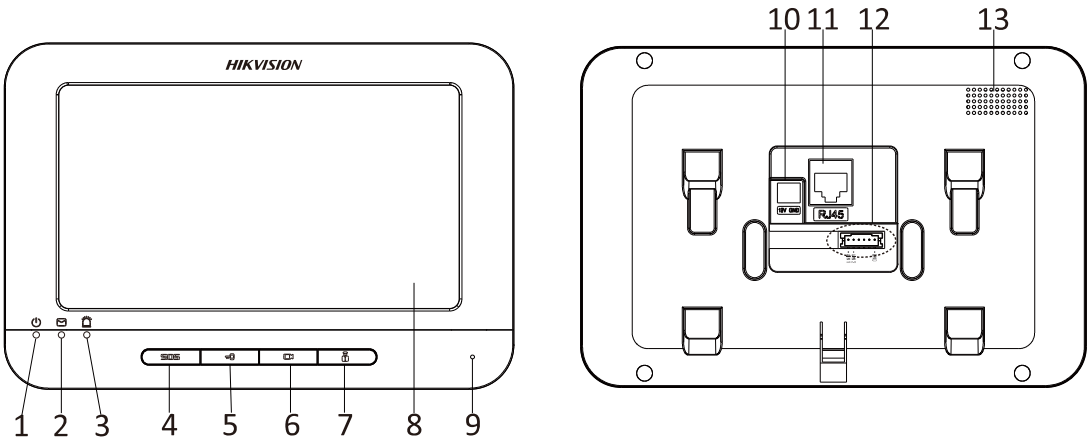


| Index | Description | Index | Description |
|---|---|---|---|
| 1 | Power Supply Indicator | 8 | LCD Display Screen |
| 2 | Information Indicator | 9 | Microphone |
| 3 | Alarm Indicator | 10 | Power Supply Interface |
| 4 | SOS Key | 11 | Network Interface |
| 5 | Unlock Key | 12 | Terminals |
| 6 | Live View Key | 13 | Loudspeaker |
| 7 | Management Center Key | | |

Distributed by

## Available Model

DS-KH6310-WL


**Headquarters**
No.555 Qianmo Road, Binjiang District,
Hangzhou 310051, China
T +86-571-8807-5998
overseasbusiness@hikvision.com

**Hikvision USA**
T +1-909-895-0400
sales.usa@hikvision.com

**Hikvision Europe**
T +31-23-55-42-770
info.eu@hikvision.com

**Hikvision Middle East**
T +971-4-8816086
salesme@hikvision.com

**Hikvision Russia**
T +7-495-669-67-99
saleru@hikvision.com

**Hikvision India**
T +91-22-28469900
sales@pramahikvision.com

**Hikvision Italy**
T +39-0438-6902
info.it@hikvision.com

**Hikvision France**
T +33(0)1-85-330-450
info.fr@hikvision.com

**Hikvision Spain**
T +34-91-737-16-55
info.es@hikvision.com

**Hikvision Poland**
T +48-22-460-01-50
poland@hikvision.com

**Hikvision UK**
T +01628-902140
support.uk@hikvision.com

**Hikvision Singapore**
T +65-6684-4718
sg@hikvision.com

**Hikvision Oceania**
T +61-2-8599-4233
salesau@hikvision.com

**Hikvision Canada**
T +1-909-895-0400
sales.usa@hikvision.com

**Hikvision Korea**
T +82-31-731-8841
sales.korea@hikvision.com

**Hikvision Brazil**
T +55 11 3318-0050
Latam.support@hikvision.com

**Hikvision Africa**
T +27 (10) 0351172
sale.africa@hikvision.com

**Hikvision Hong Kong**
T +852-2151-1761


© Hikvision Digital Technology Co., Ltd. 2017 | Data subject to change without notice |

**20170818**