DS-1273ZJ-140-Y

Wall Mount



Key Feature

- Hikvision White
- Anti-Corrosion Aluminum Alloy
- Wall Mount

Specification

Model	DS-1273ZJ-140-Y
Color	White
Weight	703 g (1.55 lb.)
Material	Aluminum alloy
Dimension	Ø140 × 183.5 × 232 mm (5.51" × 7.22" × 9.13")

Available Model

DS-1273ZJ-140-Y

Dimension

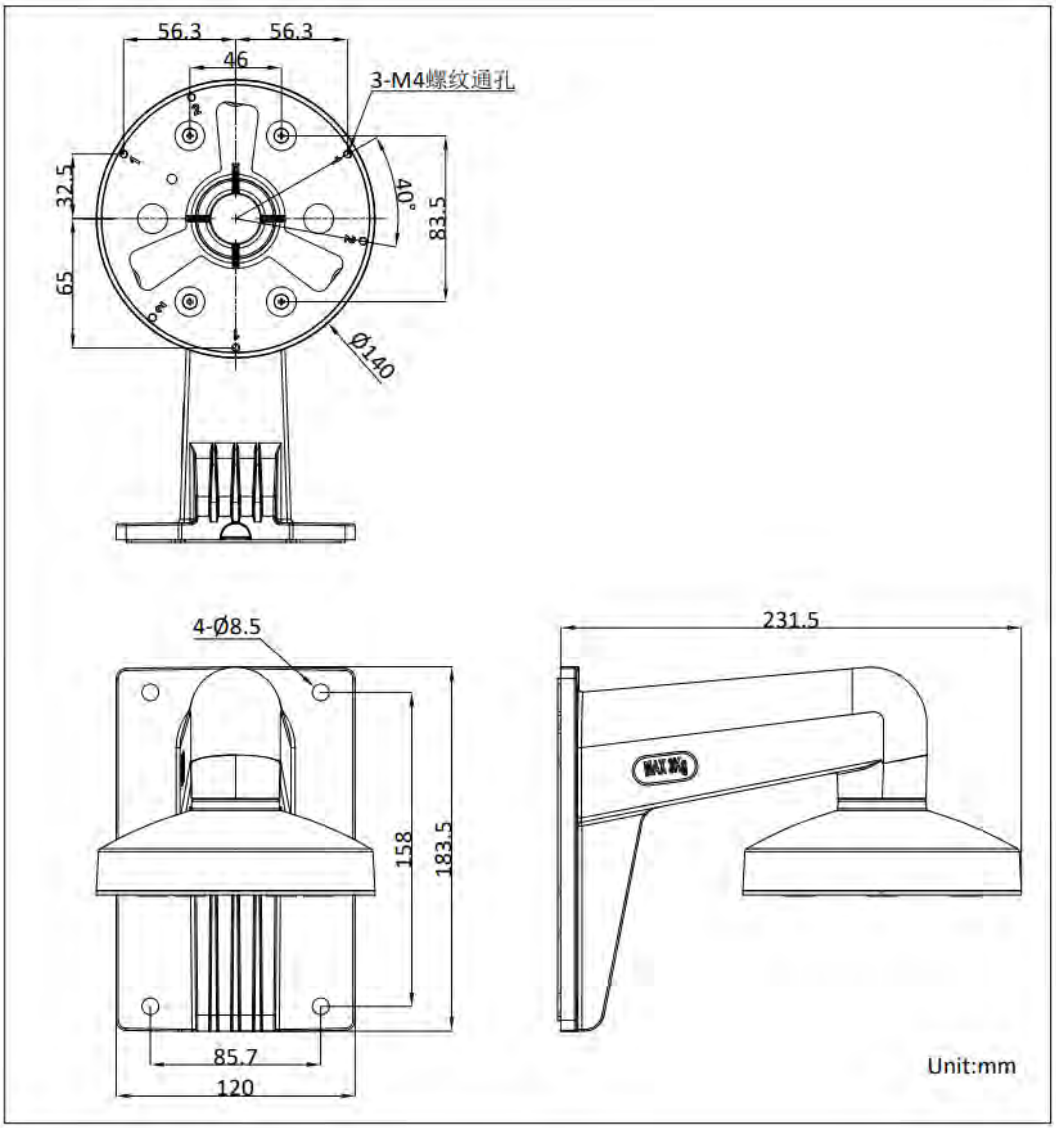
56.3
56.3
46
3-M4螺纹通孔
32.5
65
40°
83.5
Ø140
4-Ø8.5
158
183.5
85.7
120
231.5
Unit:mm