DS-1271ZJ-140-Y

Pendant Mount



Key Feature

- Hikvision White
- Anti-Corrosion Aluminum Alloy
- Pendant Mount

Specification

Model	DS-1271ZJ-140-Y
Weight	Approx. 1254 g (2.76 lb.)
Appearance	Hikvision White
Material	Metal
Dimension	Ø150 mm × 565 mm (Ø5.91" × 22.24")
Max. Load Capacity	Approx. 3 kg (6.61 lb.)

Available Model

DS-1271ZJ-140-Y

Dimension

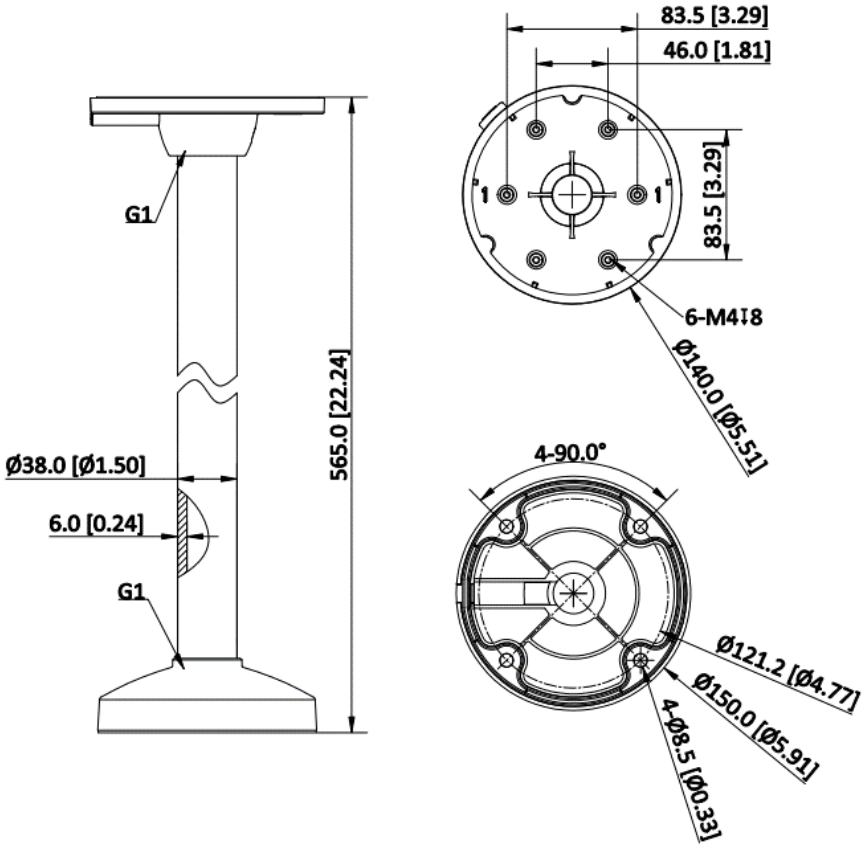

Unit: mm [inch]