DS-1272ZJ-120-Y(Black)

Wall mount



Key Feature

- Wall Mount Bracket for Dome Camera
- With adaptor plate
- Aluminum alloy
- Hikvision Black

Specification

Model	DS-1272ZJ-120-Y(Black)
Weight	Approx. 850 g (1.87 lb.)
Appearance	Hikvision White
Material	Metal
Dimension	120 mm × 121 mm × 173.5 mm (4.72" × 4.76" × 6.83")
Max. Load Capacity	Approx. 3 kg (6.61 lb.)

Available Model

DS-1272ZJ-120-Y(Black)

Dimension

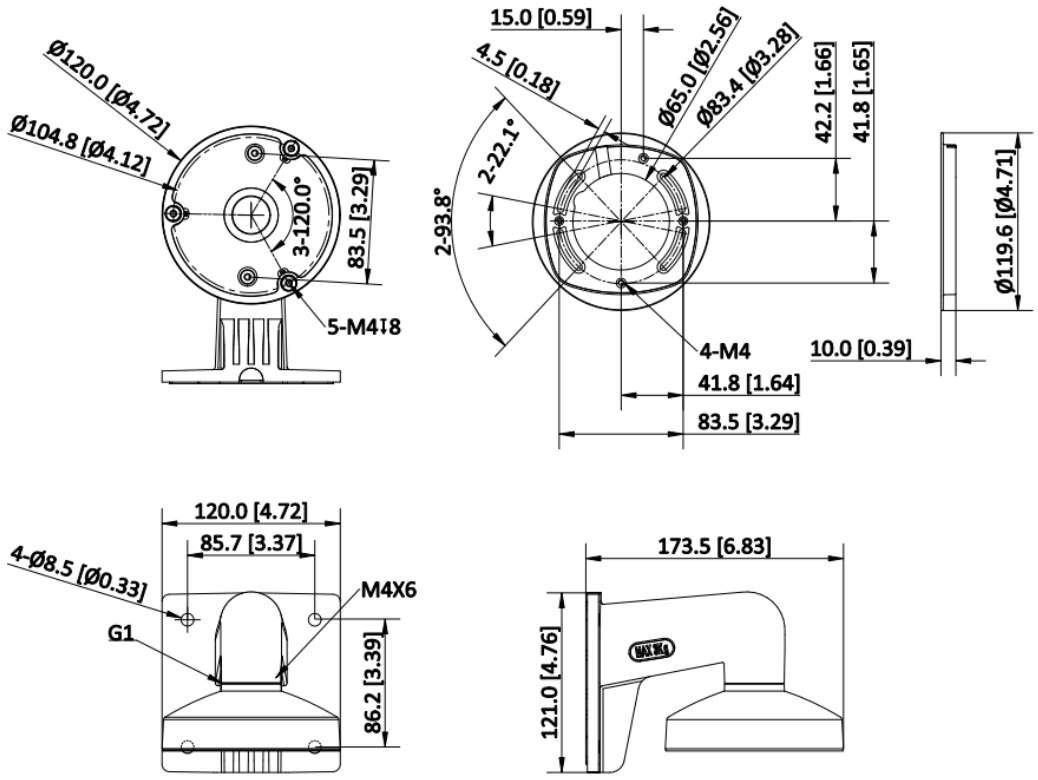

Unit: mm [inch]